ELECTRIC

STACKERS

STACKY 10

STACKY 10 *ac*

Pedestrian operator electric stackers. Capacity 1000 kg

					LOC	
Designation	1.1	Manufacturer			**SK 10 FR S16 (LE*)**	**SK 10 FR D28 (LE*)**
	1.2	Model type			Battery	Battery
	1.3	Powered by: battery, diesel, petrol, LPG, mains electric			Pedestrian	
	1.4	Driving method: manual, walk-along, upright, seated, preparation				
	1.5	Nominal capacity	Q	t	1	1
	1.6	Height to centre of gravity	C	mm	600 - 500*	600 - 500*
	1.8	Distance from fork face to track wheels (in raised pos'n)	x	mm	642 - 646*	653 - 646*
	1.9	Wheelbase (drive axle to track wheels), top/bottom position	y	mm	1160 - 1190*	1160 - 1190*
Weights	2.1	Weight in working order	kg		500 - 626*	620 - 650*
	2.2	Axle loading when load (front/rear)	kg		-	-
	2.3	Axle loading when unload (front/rear)	kg		-	-
Wheels	3.1	Tyres (front/rear)			Polyurethane	Polyurethane
	3.2	Front wheel dimensions (dia x width)		mm	1x(200x80)	1x(200x80)
	3.3	Rear wheel dimensions (dia x width)		mm	78x78	78x78
	3.4	Outrigger dimensions		mm	125x50 - 100x40*	125x50 - 100x40*
	3.5	Number of wheels front / rear (x = drive wheel)			1x1/2	1x1/2
	3.6	Track centres, front	b10	mm	517	517
	3.7	Track centres, rear	b11	mm	421 - 1000/1380*	421 - 1000/1380
Dimensions	4.2	Height with mast lowered	h1	mm	1990	2030
	4.3	Normal free lift	h2	mm	-	-
	4.4	Standard lift	h3	mm	1570	2740
	4.5	Height with mast raised	h4	mm	1995	3400
	4.6	Initial lift	h5	mm	-	-
	4.9	Handle height in driving position	h14	mm	1350/850	1350/850
	4.15	Fork height when lowered	h13	mm	90^{+5}_{+0} - 60^{+5}_{+0} *	90^{+5}_{+0} - 60^{+5}_{+0} *
	4.19	Overall length	l1	mm	1828 - 1847*	1817 - 1846*
	4.20	Length to front face of forks	l2	mm	678 - 711*	667 - 700*
	4.21	Overall width	b1	mm	806	806
	4.22	Fork dimensions (thick x wide x long)	s/e/l	mm	70x180/120x1150 - 80x40x950*	70x180/120x1150 - 80x40x950*
	4.24	Width of fork carriage	b3	mm	700 - 750*	700 - 750*
	4.25	Fork Pitch	b5	mm	560 - 720*	560 - 720*
	4.26	Width between carrying arms (min./max.)	b4	mm	290 - 900/1280*	290 - 900/1280*
	4.31	Ground clearance under mast	m1	mm	30	30 - 35*
	4.32	Ground clearance at centre of wheelbase	m2	mm	20 - 40*	20 - 40*
	4.33	Aisle width with 1000x1200 pallet widthwise (l6xb12)	AST	mm	-	-
	4.34	Aisle width with 800x1200 pallet lengthwise (b12xl6)	AST	mm	2234 - 2320*	2223 - 2310*
	4.35	Turning radius (top/bottom position)	Wa	mm	1346 - 1375*	1346 - 1375*
Performance	5.1	Travel speed load/unload		km/h	4,2/4,5	4,2/4,5
	5.2	Lifting speed, load/unload		m/s	0,14/0,25	0,12/0,2
	5.3	Lowering speed, load/unload		m/s	0,16/0,14	0,12/0,1
	5.8	Maximum slope laden/unladen (S2 5 min)		%	3,5/5	3,5/5
	5.10	Drive brake			Electromagnetic	Electromagnetic
	5.11	Parking brake			Handle release	Handle release
Drive unit	6.1	Drive motor power (S2 60 min)		kW	0,3	0,3
	6.2	Lift motor power (S3 10%)		kW	2	2
	6.3	Battery type as per standard DIN 43531/35/36,A,B,C			Semi-traction	Semi-traction
	6.4	Battery voltage and capacity		V/Ah	24/100	24/100
	6.5	Battery weight (+- 5%)		kg	50	50
Misc	8.1	Speed control			AC Mosfet Variator	
	8.4	Average sound level at driver's ears (translation)	dB	(A)	65	65

* Dimensions for adjustable straddle legs model (LE)

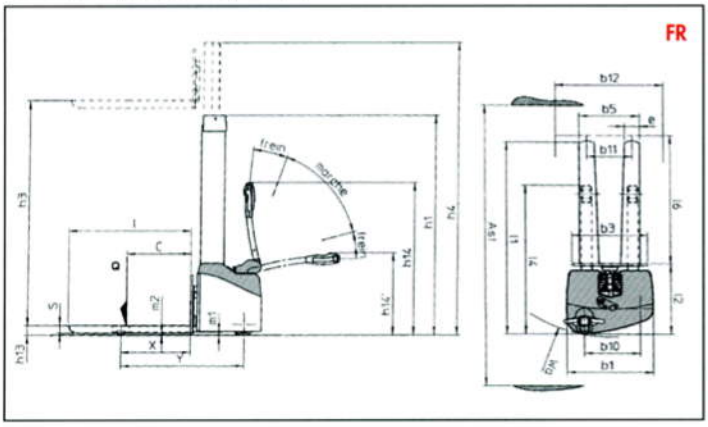

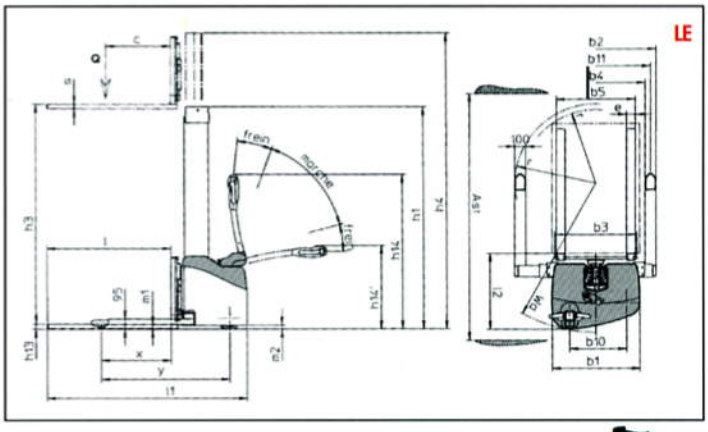

Manufacturer :

Distributed by :

MLM Z.I., 5, Avenue du Vert-Galant - 95310 SAINT-OUEN L'AUMONE - FRANCE